( ]

x

®

⚠

| | | | | | | | | |
|---|---|---|---|---|---|---|---|---|
| | | | | | | | | |
| | | | | | | | | |
| | | | | | | | | |
| | | | | | | | | |

○

○

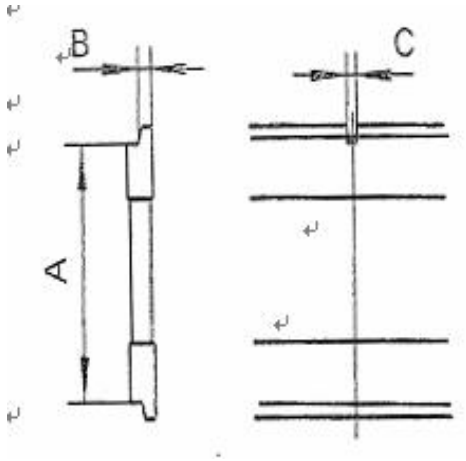
B
A
C

| | | | | | | |
|---|---|---|---|---|---|---|
| | | | | | | |
| | | | | | | |
| | | | | | | |
| | | | | | | |

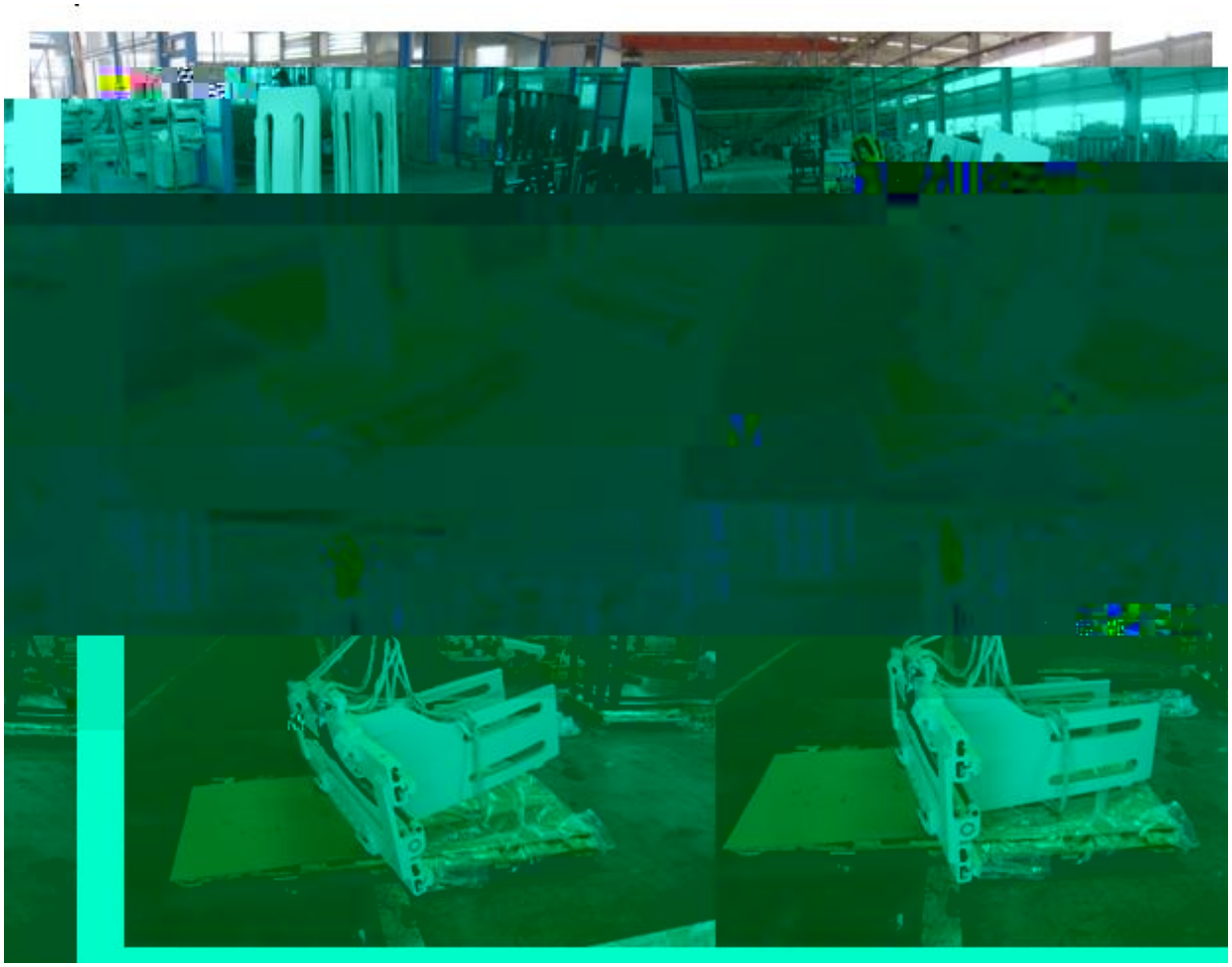

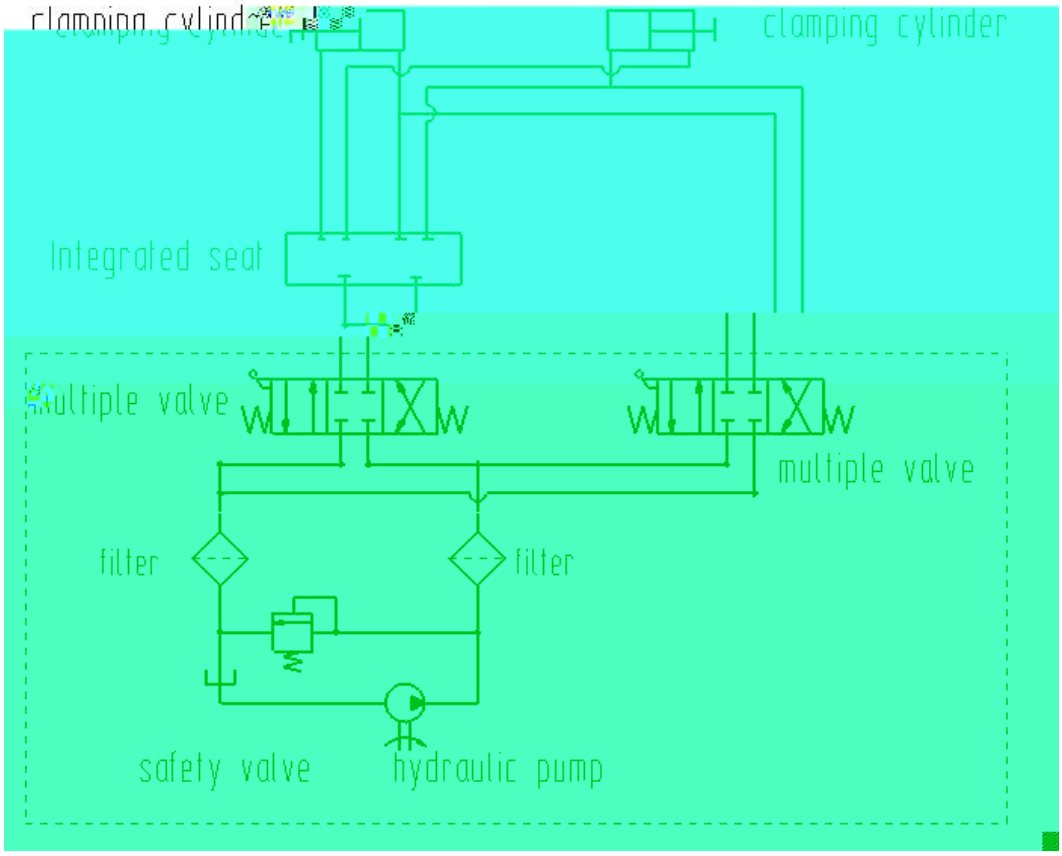
clamping cylinder
clamping cylinder
Integrated seat
Multiple valve
multiple valve
filter
filter
safety valve
hydraulic pump

⚠

| | | |
|---|---|---|
| | | |
| | | |
| | | |
| | | |
| | | |

®

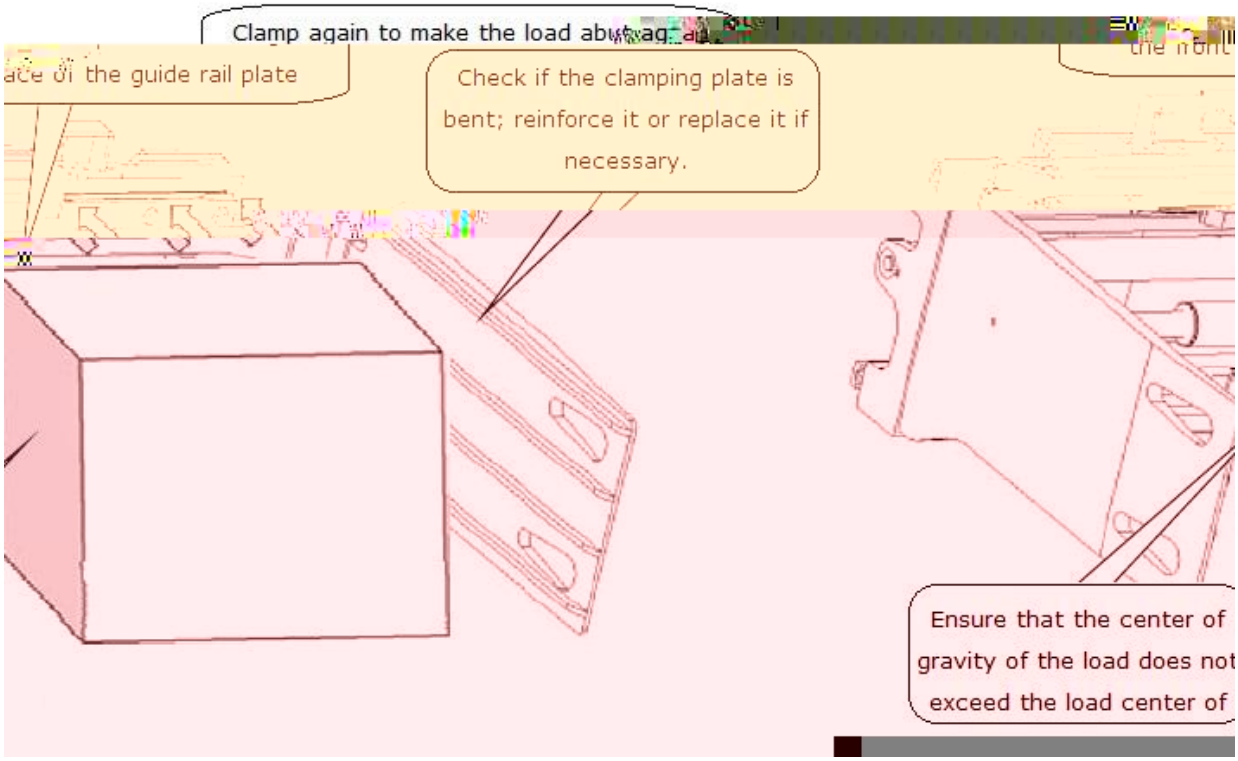
Clamp again to make the load abu
ace of the guide rail plate
Check if the clamping plate is bent; reinforce it or replace it if necessary.
Ensure that the center of gravity of the load does not exceed the load center of

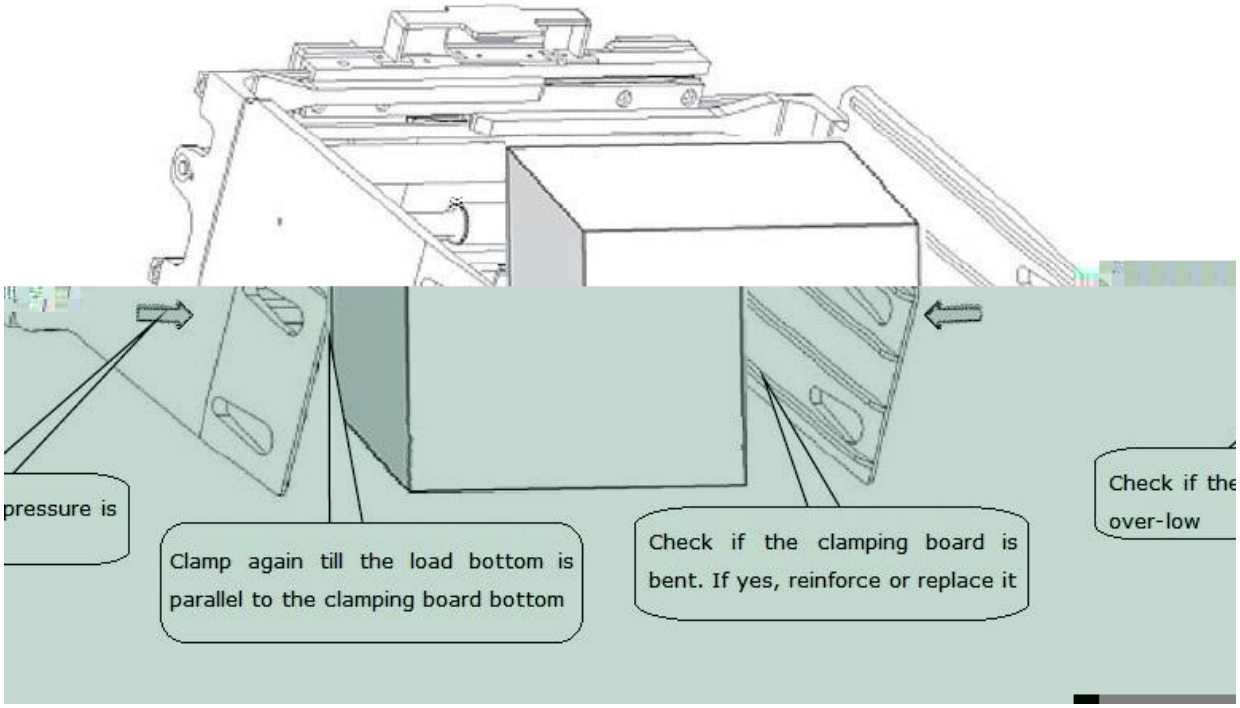
pressure is
Clamp again till the load bottom is parallel to the clamping board bottom
Check if the clamping board is bent. If yes, reinforce or replace it
Check if the
over-low